Solutions That Set New Standards

CALDWELL Since 1888

MAGNUM™ Hardware

(1179 Offset Drive Plate)

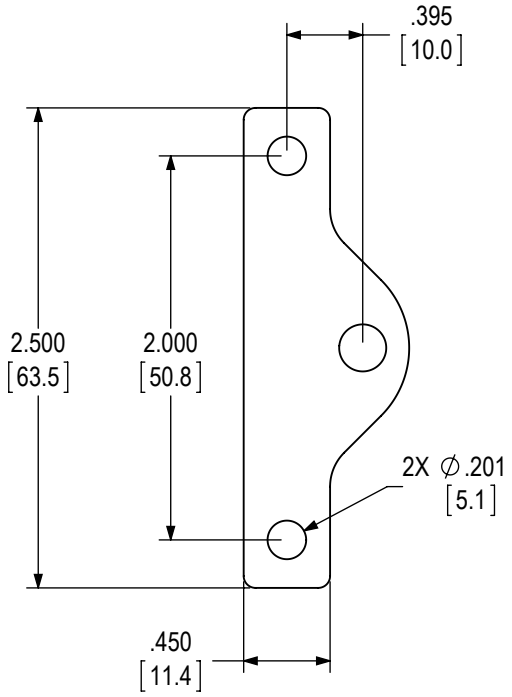

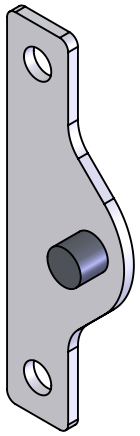

1179 Offset Drive Plate

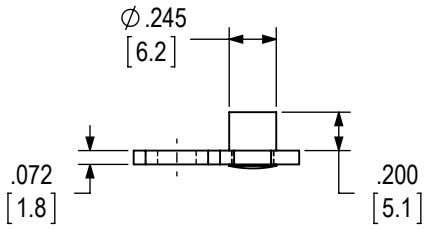

1179 twc; date 2/3/2015

Material : Stainless Steel

ADVANTAGE™ MANUFACTURING
A Division of Caldwell Mfg Co
Phone: (585) 352-3790
Fax: (585) 352-3792

web: www.caldwellmfgco.com
email: CService@caldwellmfgco.com